Motion and Presence Detector - Professional Line

PD-8 ECO

KNX - concealed white
EAN 4007841 087999
Article number 087999

easy install magnet | infrared sensor 360° | ideal 1 - 2,5 m | Presence Ø 6 m | max. 8 m | IP20 | KNX | Teach mode | manufacturer's warranty steinel.de/garantie | CE

Function description

Motion detection, presence detection and light measurement for offices, meeting rooms, passageways and more – the 360° IR presence detectors are sensNORM-compliant and ideal for sensor-based standard requirements in public buildings. With COM1, KNX and DALI-2 IPD interface. With COM1 interface, key input and fully/semi-automatic mode. Motion detection range: Ø 8 or Ø 24 m. Presence detector function with Ø 6 or Ø 7.5 m detection zone. Includes insertable cover caps in a matching colour. For concealed wiring, surface mounting and recessed ceiling installation. Configuration and operation via Smart Remote control or potentiometer. Installation-friendly modular magnetic plug-in connection. LED feedback for safe commissioning. Mounting height max. 4 m. Parallel switching (up to 10 sensors). Switching output: 2000 watt or 500 watt (LED). In black or white.

Technical specifications

Dimensions (Ø x H)	109 x 69 mm
With motion detector	Yes
Manufacturer's Warranty	5 years
Settings via	Smart Remote, ETS software, Bus
With remote control	No
Version	KNX - concealed white
PU1, EAN	4007841087999
Type	Motion and Presence Detector
Application, place	Indoors
Application, room	one-person office, function room / ancillary room, Indoors, warehouse
Colour	white
Includes corner wall mount	No
Installation site	ceiling
Installation	Concealed wiring, Ceiling

Mounting height	2 – 4 m
Mounting height max.	4,00 m
Optimum mounting height	2,8 m
Detection angle	360 °
Capability of masking out individual segments	Yes
Electronic scalability	No
Mechanical scalability	No
Reach, radial	Ø 4.5 m (16 m^2)
Reach, tangential	Ø 8 m (50 m^2)
Reach, presence	Ø 6 m (28 m^2)
Switching zones	492 switching zones
Cover material	shrouds
Functions	Motions sensor, Light sensor, Presence function, Presence detector logic

PD-8 ECO

KNX - concealed white
EAN 4007841 087999
Article number 087999

Technical specifications

IP-rating	IP20
Ambient temperature	from -20 up to 50 °C
Material	Plastic
With bus coupling	Yes
Technology, sensors	passive infrared, Mixed light metering
Twilight setting	2 – 800 lx
KNX functions	Light level, Light output 2x, Constant-lighting control, Photo-cell controller, Basic light level function, HVAC output, Logic gate, Presence output, Sabotage protection, Day / night function
Type of interconnection	Master/master
Interconnection via	Cable
Rated current	10 mA
Product category	Motion and Presence Detector

Accessories

EAN 4007841 079543	Recessed adapter In-ceiling installation
EAN 4007841 009151	Remote control Smart Remote
EAN 4007841 592806	User remote control RC5
EAN 4007841 559410	Service remote control RC8

PD-8 ECO

KNX - concealed white
EAN 4007841 087999
Article number 087999

Detection Zone 1

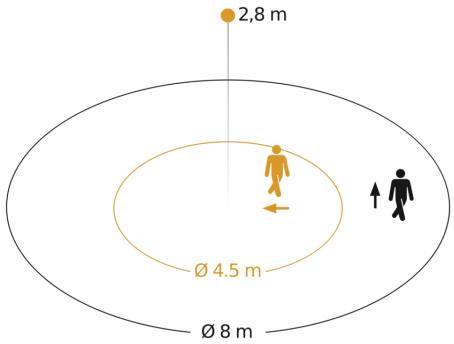

Possible mounting height: 2,00 m – 4,00 m
Orange: radial
Black: tangential

Detection Zone 2

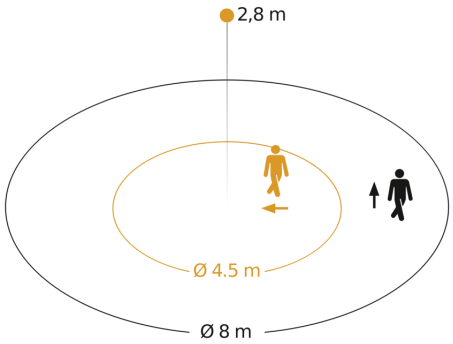

Possible mounting height: 2,00 m – 4,00 m
Orange: radial
Black: tangential
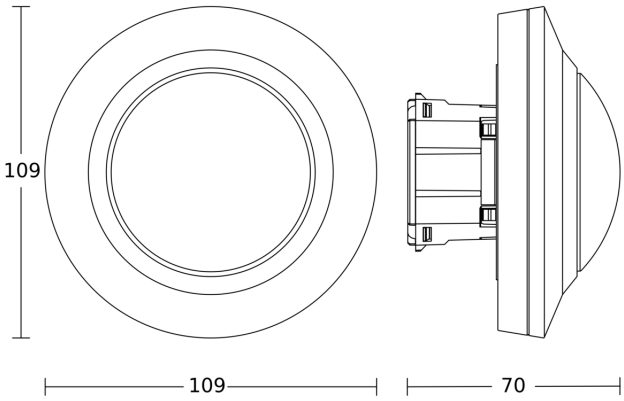
Dimension Drawing